MALE END VIEW

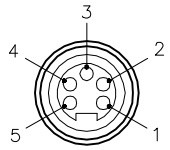

1 = RED/WHITE
2 = RED/BLUE
3 = GREEN/YELLOW
4 = RED/ORANGE
5 = RED/BLACK

SPECIFICATIONS	
HOUSING MATERIAL/FINISH	BRASS/NICKEL
CONTACT CARRIER MATERIAL/COLOR	TPU/BLACK
CONTACT MATERIAL/PLATING	BRASS/GOLD
RATED CURRENT [A]	9.0 A
RATED VOLTAGE [V]	600 V
CONDUCTOR INSULATION MATERIAL	PVC
NUMBER OF CONDUCTORS [AWG]	5x18 AWG
TEMPERATURE RATING	−40°C to +80°C (−40°F to +176°F)
PROTECTION CLASS	NEMA 1,3,4,6P,12 & IECIP67, IP68,IP69,IP69K

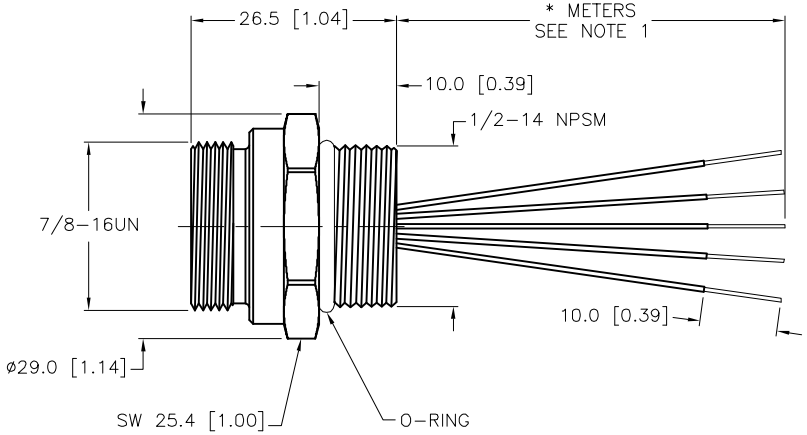

CABLE LENGTH	TOLERANCE *
ALL LENGTHS	+ 4% (OR 50mm) OF LENGTH − 0% (OR 0mm) OF LENGTH WHICHEVER IS GREATER
STRIP LENGTH	**TOLERANCE ***
0−7mm	±0.5mm
8−29mm	±1.0mm
30−49mm	±2.0mm
50−69mm	±3.0mm
70−100mm	±4.0mm
OVER 100mm	±5.0mm
* UNLESS OTHERWISE SPECIFIED	

SOURCE DRAWING - FOR REFERENCE ONLY

NOTES:

1. "*" INDICATES LEAD LENGTH IN METERS. CONTACT TURCK TO ORDER SPECIFIC LENGTHS.

REV	DESCRIPTION	BY	DATE	ECO NO.
C	UPDATE PROTECTION CLASS	CBM	04/13/21	76628

RELATED DOCUMENTS
1.
2.
3.
4.

3RD ANGLE PROJECTION

THIS DRAWING IS CONFIDENTIAL AND THE PROPERTY OF TURCK INC. USE OF THIS DOCUMENT WITHOUT WRITTEN PERMISSION IS PROHIBITED.

TURCK

3000 CAMPUS DRIVE
MINNEAPOLIS, MN 55441
1−800−544−7769
(763) 553−7300
(763) 553−0708 fax
www.turck.us

MATERIAL: SEE SPECIFICATIONS

FINISH: SEE SPECIFICATIONS

ALL DIMENSIONS DISPLAYED ON THIS DRAWING ARE FOR REFERENCE ONLY

CONTACT TURCK FOR MORE INFORMATION

DRFT: JBJ | DATE: 11/12/01
APVD: | SCALE: 1=1.0

UNIT OF MEASUREMENT
MILLIMETER [INCH]
DO NOT SCALE THIS DRAWING

DESCRIPTION: RSF 511−*M

IDENTIFICATION NO.:

REV: C

FILE: 777000541 | SHEET 1 OF 1